AMMONIA
R717

CO2
BUTANE
ISOBUTANE
PROPANE

HFC
HFO
CFC

WATER
R718

OIL

Product catalog 2025

HB Products

Introduction

With over 25 years of experience, HB Products is at the forefront of developing and producing sensors for industrial and commercial refrigeration and heat-pump systems.

Based in Aarhus, Denmark, we continuously push the technology to ensure better, more efficient, and durable products for the future.

With distributors in more than 60 countries, we can ensure technical expertise and optimal solutions worldwide for energy-efficient evaporator control, level control, and oil management.

However, our strong global presence never compromises the close collaboration we are dedicated to maintain with our customers.

Liquid Level Switches 04

Liquid Level Sensors 18

Vapor Quality Sensors 24

Defrost & Ice Bank 32

Safety & Leakage Detection 38

Pressure & Temperature Sensors 44

Optimal safety in hazardous areas 46

AMMONIA
R717

CO2
BUTANE
ISOBUTANE
PROPANE

HFC
HFO
CFC

WATER
R718

OIL

Liquid Level Switches

A Liquid Level Switch is a vital component used in many industries to detect the presence or absence of liquid at a certain level within a container or tank. These switches are designed to trigger an alarm, activate a pump, or control other processes based on the liquid level. We have a diverse range of capacitive Level Switches tailored for refrigeration applications.

Features and benefits

- **Tailored for industrial refrigeration:** Our switches are built for industrial refrigeration applications, ensuring optimal performance and reliability without needing adaptations or modifications.
- **Easy installation and diagnostics:** The unique split design makes it easy to change the electronic part without evacuating the system.
- **Wide temperature range:** With a temperature range from -60°C to 145°C (-76°F to 293°F), our switches can operate effectively across a broad spectrum of temperatures, providing reliability in diverse operating conditions. It is also equipped with built-in heaters, most electronic units are suitable for wet and low temperatures, safeguarding against condensation and ensuring consistent performance.
- **Power supply:** All switches can be supplied with both AC and DC power, offering flexibility in installation. Additionally, we offer 24V NPN/PNP output options and solid-state solutions.
- **Switches for all types of liquids:** We have switches for all types of liquids, such as ammonia, CO2 and oil. They can also operate in scenarios involving two immiscible liquids, such as oil in ammonia or oil in water.
- **Easy configuration:** With options for both plug-and-play installation and customization using HB Tool, our products can be accurately configured to suit specific application requirements.

Level Switches for Ammonia, Water and Alcohol

Low temperature Recommended refrigerant temperature: -60°C to 80°C (-76°F to 176°F) Protection degree: IP65	**HBSR-SSR-1/IP** Power supply: 24V AC/DC	
	HBSR-U Power supply: 24V AC/DC	
Medium temperature Recommended refrigerant temperature: -30°C to 80°C (-22°F to 176°F) Protection degree: IP54	**HBSR** Power supply: 24V AC/DC	
	HBSR-SSR-2 Power supply: 90-240V AC	

Level Switches for CO2, Butane, Isobutane and Propane

Low temperature Recommended refrigerant temperature: -60°C to 80°C (-76°F to 176°F)C Protection degree: IP65	**HBSC2-SSR-1/IP** Power supply: 24V AC/DC	
	HBSC2-U Power supply: 24V AC/DC	
Medium temperature Recommended refrigerant temperature: -30°C to 80°C (-22°F to 176°F) Protection degree: IP54	**HBSC2** Power supply: 24V AC/DC	
	HBSC2-SSR-2 Power supply: 90-240V AC	

Level Switches for HFO, HFC and CFC		
Low temperature Recommended refrigerant temperature: -60°C to 50°C (-76°F to 122°F) Protection degree: IP65	**HBSR-HFC-SSR-1/IP** Power supply: 24V AC/DC	
	HBSR-HFC-U Power supply: 24V AC/DC	
Medium temperature Recommended refrigerant temperature: -30°C to 80°C (-22°F to 176°F) Protection degree: IP54	**HBSR-HFC** Power supply: 24V AC/DC	
	HBSR-HFC-SSR-2 Power supply: 90-240V AC	

Level Switches for Oil	PAO oil Mineral oil	POE Oil PAG Oil
Low temperature Recommended oil temperature: -30°C to 40°C (-22°F to 104°F) Protection degree: IP65	**HBSO1-U-LT** Power supply: 24V AC/DC Output: PNP or NPN	**HBSO2-U-LT** Power supply: 24V AC/DC Output: PNP or NPN
	HBSO1-SSR-2-LT Power supply: 90-240V AC Output: Solid-state relay	**HBSO2-SSR-2-LT** Power supply: 90-240V AC Output: Solid-state relay
High temperature Recommended oil temperature: 0°C to 145°C (32°F to 293°F) Protection degree: IP54	**HBSO1-SSR-1-HT** Power supply: 24V AC/DC Output: Solid-state relay	**HBSO2-SSR-1-HT** Power supply: 24V AC/DC Output: Solid-state relay
Universal Recommended oil temperature: -30°C to 145°C (-22°F to 293°F) Protection degree: IP65	**HBSO1-SSR-1-ALL** Power supply: 24V AC/DC Output: Solid-state relay	**HBSO2-SSR-1-ALL** Power supply: 24V AC/DC Output: Solid-state relay

Liquid detection	Oil detection in gas	Oil detection in liquid ammonia
Oil Return Switch	**HBSO**	**HBOR**
Oil Return Switch	**HBOC/C**	**HBOR/C**

Ejector	
Oil Ejector	**HBEJ-MK2**

Level Switches for refrigerants

We offer switches for all refrigerants, such as ammonia, CO2, butane, HFO, HFC, and CFC. Our switches are categorized by different temperature ranges, making it easy to select the right one based on your refrigerant temperature needs.

Illustration featuring our HBSR Level Switch paired with the HBOR from our Oil Management Program.

The upper HBSR switch is an NC version, while the lower HBSR switch is an NO version.

The HBOR Level Switch is designed to detect the difference between oil and refrigerant - ensuring that when oil is drained and ammonia surrounds the sensor, the drain valve closes without risking ammonia leaks.

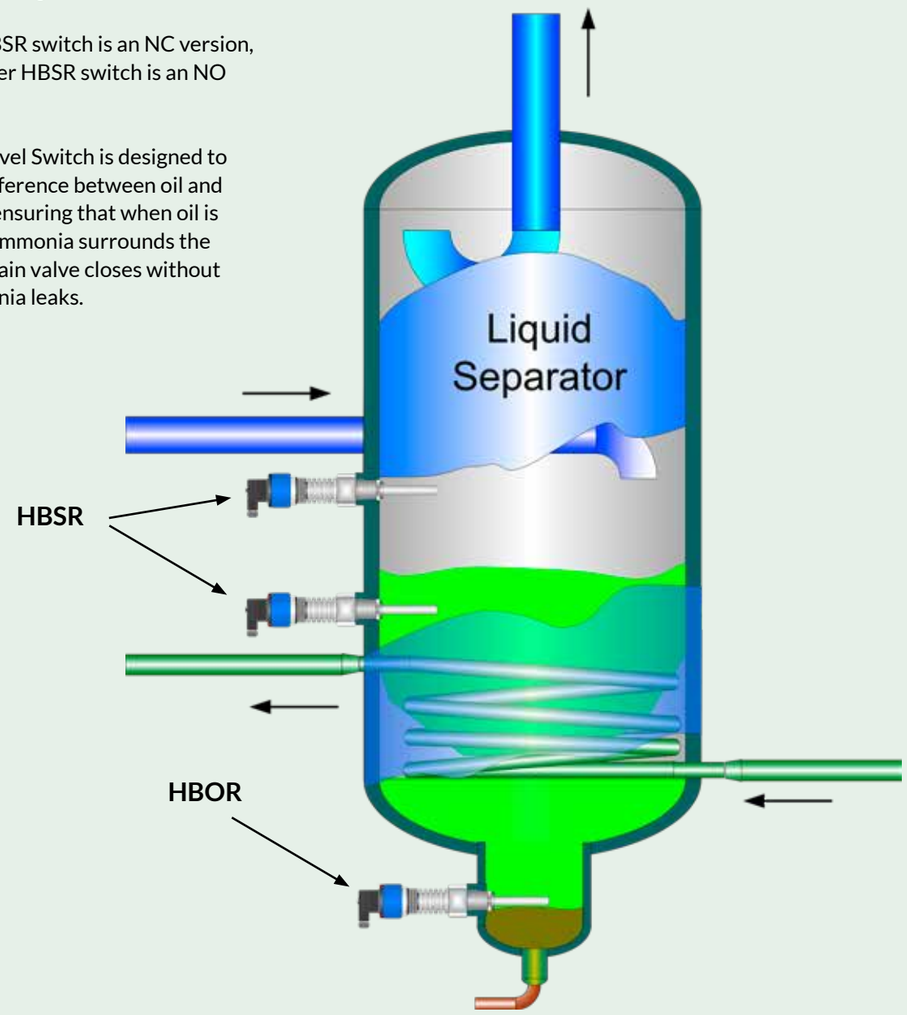

Scan the QR code and download the data sheet

Ammonia, Water and Alcohol

Low temperature I -60°C to 80°C (-76°F to 176°F)

The HBSR-SSR-1/IP is perfect for freezers, outdoor applications, and other demanding environments. This switch can be configured for various refrigerant types and outputs using the HB Tool. It features a solid-state relay output with a maximum switching capacity of 40V and 1A. It can detect ammonia and water in both gas and oil.

Recommended refrigerant temperature: -60°C to 80°C (-76°F to 176°F)
Ambient temperature: -40°C to 50°C (-40°F to 122°F)
Protection degree: IP65
Pressure tolerance: 100 bar (1450 psi)
Power supply: 24V AC/DC
Output: Solid-state relay and NO/NC

HBSR-SSR-1/IP

The HBSR-U is a pre-configured Level Switch designed for condensing conditions. It features a PNP or NPN output suitable for a PLC or relay with a maximum of 50 mA. This switch can detect ammonia and water in both gas and oil.

Recommended refrigerant temperature: -60°C to 80°C (-76°F to 176°F)
Ambient temperature: -40°C to 50°C (-40°F to 122°F)
Protection degree: IP65
Pressure tolerance: 100 bar (1450 psi)
Power supply: 24V AC/DC
Output: PNP/NPN and NO/NC (Max 50 mA)

HBSR-U

Ammonia, Water and Alcohol

Medium temperature I -30°C to 80°C (-22°F to 176°F)

The HBSR is a pre-configured Level Switch designed for dry conditions. It can detect ammonia and water in both gas and oil.

Recommended refrigerant temperature: 0°C to 80°C (32°F to 176°F)
Ambient temperature: 0°C to 50°C (32°F to 122°F)
Protection degree: IP54
Pressure tolerance: 100 bar (1450 psi)
Power supply: 24V AC/DC
Output: PNP/NPN and NO/NC (Max 50 mA)

HBSR

The HBSR-SSR-2 is a pre-configured Level Switch designed for dry conditions. It can detect ammonia and water in both gas and oil.

Recommended refrigerant temperature: -30°C to 80°C (-22°F to 176°F)
Ambient temperature: -30°C to 50°C (-22°F to 122°F)
Protection degree: IP54
Pressure tolerance: 100 bar (1450 psi)
Power supply: 90-240V AC
Output: Solid-state relay and NO/NC (Max 40W)

HBSR-SSR-2

CO2, Butane, Isobutane and Propane

Low temperature I -60°C to 80°C (-76°F to 176°F)

The HBSC2-SSR/IP is perfect for freezers, outdoor applications, and other demanding environments. This switch can be configured for various refrigerant types and outputs using the HB Tool. It features a solid-state relay output with a maximum switching capacity of 40V and 1A. It can detect liquid refrigerant in gas.

Recommended refrigerant temperature: -60°C to 80°C (-76°F to 176°F)
Ambient temperature: -40°C to 50°C (-40°F to 122°F)
Protection degree: IP65
Pressure tolerance: 150 bar (2175 psi)
Power supply: 24V AC/DC
Output: Solid-state relay and NO/NC

HBSC2-SSR-1/IP

The HBSC2-U is a pre-configured Level Switch designed for condensing conditions. It features a PNP or NPN output suitable for a PLC or relay with a maximum of 50 mA. It can detect liquid refrigerant in gas.

Recommended refrigerant temperature: -40°C to 80°C (-40°F to 176°F)
Ambient temperature: -40°C to 50°C (-40°F to 122°F)
Protection degree: IP65
Pressure tolerance: 150 bar (2175 psi)
Power supply: 24V AC/DC
Output: PNP/NPN and NO/NC

HBSC2-U

Medium temperature I -30°C to 80°C (-22°F to 176°F)

The HBSC2 is a pre-configured Level Switch designed for dry conditions. It can detect liquid refrigerant in gas.

Recommended refrigerant temperature: 0°C to 80°C (32°F to 176°F)
Ambient temperature: 0°C to 50°C (32°F to 122°F)
Protection degree: IP54
Pressure tolerance: 150 bar (2175 psi)
Power supply: 24V AC/DC
Output: PNP/NPN and NO/NC

HBSC2

The HBSC2-SSR-2 is a pre-configured Level Switch designed for dry conditions. It can detect liquid refrigerant in gas.

Recommended refrigerant temperature: -30°C to 80°C (-22°F to 176°F)
Ambient temperature: -30°C to 50°C (-22°F to 122°F)
Protection degree: IP54
Pressure tolerance: 150 bar (2175 psi)
Power supply: 90-240V AC
Output: Solid-state relay and NO/NC (Max 40W)

HBSC2-SSR-2

HFO, HFC and CFC

Low temperature I -60°C to 80°C (-76°F to 176°F)

The HBSR-HFC-SSR-1/IP is perfect for freezers, outdoor applications, and other demanding environments. This switch can be configured for various refrigerant types and outputs using the HB Tool. It features a solid-state relay output with a maximum switching capacity of 40V and 1A. It can detect refrigerant in gas.

Recommended refrigerant temperature: -60°C to 80°C (-76°F to 176°F)
Ambient temperature: -40°C to 50°C (-40°F to 122°F)
Protection degree: IP65
Pressure tolerance: 100 bar (1450 psi)
Power supply: 24V AC/DC
Output: Solid-state relay and NO/NC

HBSR-HFC-SSR-1/IP

The HBSR-HFC-U is a pre-configured Level Switch designed for condensing conditions. It features a PNP or NPN output suitable for a PLC or relay with a maximum of 50 mA. It can detect refrigerant in gas.

Recommended refrigerant temperature: -40°C to 80°C (-40°F to 176°F)
Ambient temperature: -40°C to 50°C (-40°F to 122°F)
Protection degree: IP65
Pressure tolerance: 100 bar (1450 psi)
Power supply: 24V AC/DC
Output: PNP/NPN and NO/NC

HBSR-HFC-U

Medium temperature I -30°C to 80°C (-22°F to 176°F)

The HBSR-HFC is a pre-configured Level Switch designed for dry conditions. It can detect refrigerant in gas.

Recommended refrigerant temperature: 0°C to 80°C (32°F to 176°F)
Ambient temperature: 0°C to 50°C (32°F to 122°F)
Protection degree: IP54
Pressure tolerance: 100 bar (1450 psi)
Power supply: 24V AC/DC
Output: PNP/NPN and NO/NC

HBSR-HFC

The HBSR-HFC-SSR-2 is a pre-configured Level Switch designed for dry conditions. It can detect refrigerant in gas.

Recommended refrigerant temperature: -30°C to 80°C (-22°F to 176°F)
Ambient temperature: -30°C to 50°C (-22°F to 122°F)
Protection degree: IP54
Pressure tolerance: 100 bar (1450 psi)
Power supply: 90-240V AC
Output: Solid-state relay and NO/NC (Max 40W)

HBSR-HFC-SSR-2

Level Switches for oil

Our extensive range of switches covers various oil types, including PAO oil, mineral oil, POE oil, and PAG oil. We also offer switches designed for different temperature ranges, ensuring that everyone can find the perfect fit for their system.

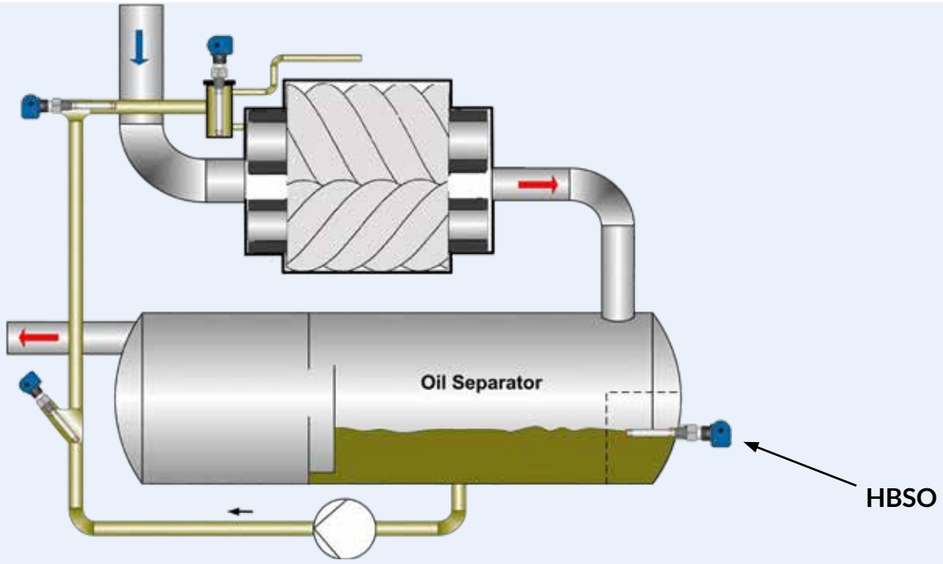

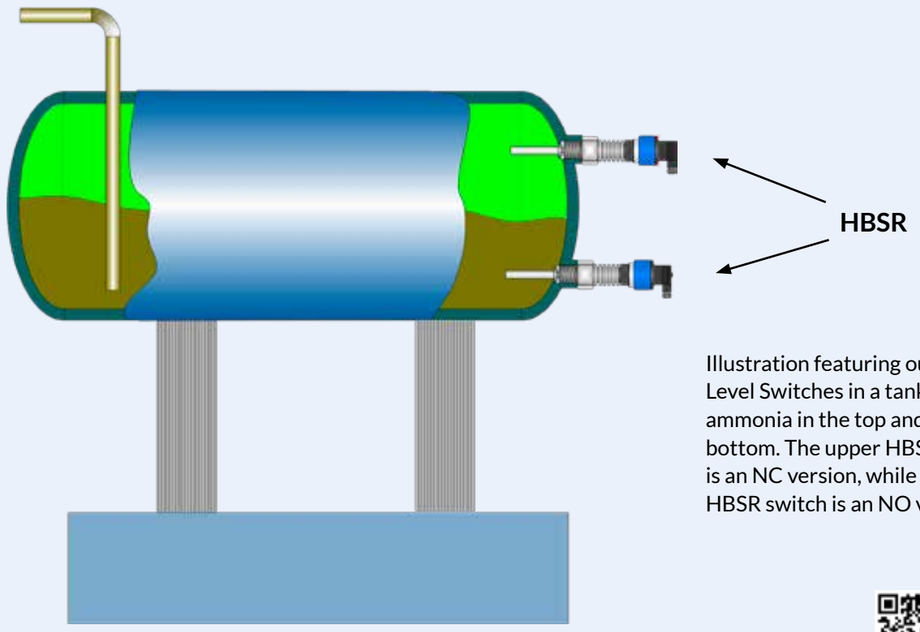

Illustration featuring our HBSR Level Switches in a tank with ammonia in the top and oil in the bottom. The upper HBSR switch is an NC version, while the lower HBSR switch is an NO version.

Scan the QR code and download the data sheet

Oil

Low temperature I -60°C to 40°C (-76°F to 104°F)

The HBSO1-LT and HBSO2-LT are standard low-temperature level switches designed for detecting common lubricating oils in refrigeration systems. These switches are ideal for condensing applications, with the HBSO1 as the standard product and the HBSO2 for PAG and POE oils at low temperatures. All HBSO switches can detect oil in gas.

Recommended oil temperature: -60°C to 40°C (-76°F to 104°F)
Ambient temperature: -40°C to 50°C (-40°F to 122°F)
Protection degree: IP65
Pressure tolerance: 100 bar (1450 psi)
Power supply: 24V AC/DC
Output: PNP/NPN and NO/NC

HBSO1-U-LT | **HBSO2-U-LT**

The HBSO1-SSR-2-LT and HBSO2-SSR-2-LT are standard low-temperature level switches designed for detecting common lubricating oils in refrigeration systems. These switches are ideal for condensing applications, with the HBSO1 as the standard product and the HBSO2 for PAG and POE oils at low temperatures. All HBSO switches can detect oil in gas.

Recommended oil temperature: -60°C to 40°C (-76°F to 104°F)
Ambient temperature: -40°C to 50°C (-40°F to 122°F)
Protection degree: IP65
Pressure tolerance: 100 bar (1450 psi)
Power supply: 90-240V AC
Output: Solid-state relay and NO/NC (Max 40W)

HBSO1-SSR-2-LT | **HBSO2-SSR-2-LT**

Oil

Medium temperature I 0°C to 100°C (32°F to 212°F)

The HBSO1 and HBSO2 are standard level switches designed for detecting common lubricating oils in refrigeration systems. These switches are ideal for dry applications, with the HBSO1 as the standard product and the HBSO2 for PAG and POE oils at low temperatures. All HBSO switches can detect oil in gas.

Recommended oil temperature: 0°C to 100°C (32°F to 212°F)
Ambient temperature: 0°C to 50°C (32°F to 122°F)
Protection degree: IP54
Pressure tolerance: 100 bar (1450 psi)
Power supply: 24V AC/DC
Output: PNP/NPN and NO/NC

HBSO1 | **HBSO2**

The HBSO1-SSR-2 and HBSO2-SSR-2 are standard level switches designed for detecting common lubricating oils in refrigeration systems. These switches are ideal for normal dry applications, with the HBSO1 as the standard product and the HBSO2 for PAG and POE oils at low temperatures. The switch is preset and the setpoint cannot be changed. All HBSO switches can detect oil in gas.

Recommended oil temperature: 0°C to 80°C (32°F to 176°F)
Ambient temperature: 0°C to 80°C (32°F to 176°F)
Protection degree: IP54
Pressure tolerance: 100 bar (1450 psi)
Power supply: 90-240V AC
Output: Solid-state relay and NO/NC (Max 40W)

HBSO1-SSR-2 | **HBSO2-SSR-2**

Level Switches for oil

High temperature I 0°C to 100°C (32°F to 212°F)

Oil

The HBSO1-SSR-1-HT and HBSO2-SSR-1-HT are high-temperature level switches designed for detecting common lubricating oils in refrigeration systems. The HBSO1 models are ideal for mineral oil, PAO, and POE, while the HBSO2 models work with PAG oils. The settings can be changed in the HB Tool. All HBSO switches can detect oil in gas.

Recommended oil temperature: 0°C to 100°C (32°F to 212°F)
Ambient temperature: -20°C to 50°C (-4°F to 122°F)
Protection degree: IP54
Pressure tolerance: 150 bar (2175 psi)
Power supply: 24V AC/DC
Output: Solid-state relay and NO/NC

HBSO1-SSR-1-HT | **HBSO2-SSR-1-HT**

Universal I -30°C to 100°C (-22°F to 212°F)

Oil

The HBSO1-SSR-1-/ALL and HBSO2-SSR-1-/ALL are universal products adjustable for a wide temperature range and all oils. The HBSO1 models are ideal for mineral oil, PAO, and POE, while the HBSO2 models work with PAG oils. The settings can be changed in the HB Tool. All HBSO switches can detect oil in gas.

Recommended oil temperature: -30°C to 100°C (-22°F to 212°F)
Ambient temperature: -20°C to 50°C (-4°F to 122°F)
Protection degree: IP65
Pressure tolerance: 150 bar (2175 psi)
Power supply: 24V AC/DC
Output: Solid-state relay and NO/NC

HBSO1-SSR-1-ALL | **HBSO2-SSR-1-ALL**

ATEX Level Switches

The HBSR-EX is used in hazardous Zone 0 areas together with a barrier which limits the current in the circuit. The switch can be adjusted to different refrigerant types and outputs by using the HB Tool. The output is either 4 mA or 20 mA or a direct linear analog measurement. It can detect ammonia and water in both gas and oil.

Recommended refrigerant temperature: -60°C to 80°C (-76°F to 176°F)
Ambient temperature: -20°C to 50°C (-4°F to 122°F)
Protection degree: IP65
Pressure tolerance: 100 bar (1450 psi)
Power supply: 24V DC
Output: 2-wire mA

HBSR-EX

The HBSC2-EX is used in hazardous Zone 0 areas together with a barrier which limits the current in the circuit. The switch can be adjusted to different refrigerant types and outputs by using the HB Tool. The output is either 4 mA or 20 mA or a direct linear analog measurement. It can detect refrigerant in gas.

Recommended refrigerant temperature: -60°C to 80°C (-76°F to 176°F)
Ambient temperature: -20°C to 50°C (-4°F to 122°F)
Protection degree: IP65
Pressure tolerance: 150 bar (1450 psi)
Power supply: 24V DC
Output: 2-wire mA

HBSC2-EX

The HBSR-HFC-EX is used in hazardous Zone 0 areas together with a barrier which limits the current in the circuit. The switch can be adjusted to different refrigerant types and outputs by using the HB Tool. The output is either 4 mA or 20 mA or a direct linear analog measurement. It can detect refrigerant in gas.

Recommended refrigerant temperature: -60°C to 80°C (-76°F to 176°F)
Ambient temperature: -20°C to 50°C (-4°F to 122°F)
Protection degree: IP65
Pressure tolerance: 100 bar (1450 psi)
Power supply: 24V DC
Output: 2-wire mA

HBSR-HFC-EX

The HBSO-EX is used in hazardous Zone 0 areas together with a barrier which limits the current in the circuit. The switch can be adjusted to different oil types and outputs by using the HB Tool. The output is either 4 mA or 20 mA or a direct linear analog measurement. It can detect oil in gas.

Recommended oil temperature: -30°C to 80°C (-22°F to 176°F)
Ambient temperature: -20°C to 50°C (-4°F to 122°F)
Protection degree: IP65
Pressure tolerance: 100 bar (1450 psi)
Power supply: 24V DC
Output: 2-wire mA

HBSO-EX

Oil Return Switches & Oil Ejector

We have a specialized range of products designed for liquid detection, specifically tailored for detecting oil in gas and oil in ammonia. Our sensors ensure precise and reliable monitoring, enhancing the efficiency and safety of your systems.

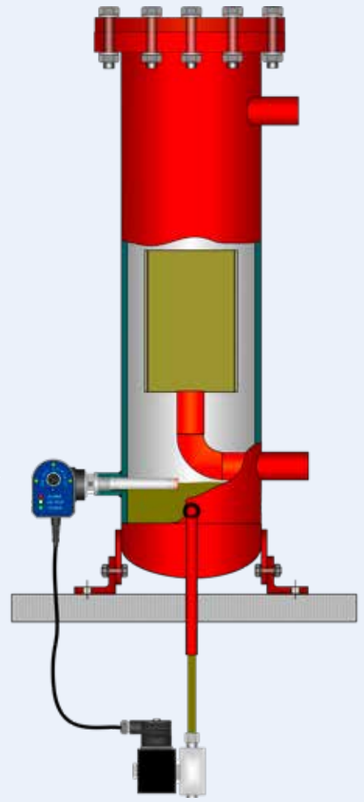

Illustration showcasing our HBOC/C Level Switch, designed to detect common lubricating oils in gas and air.

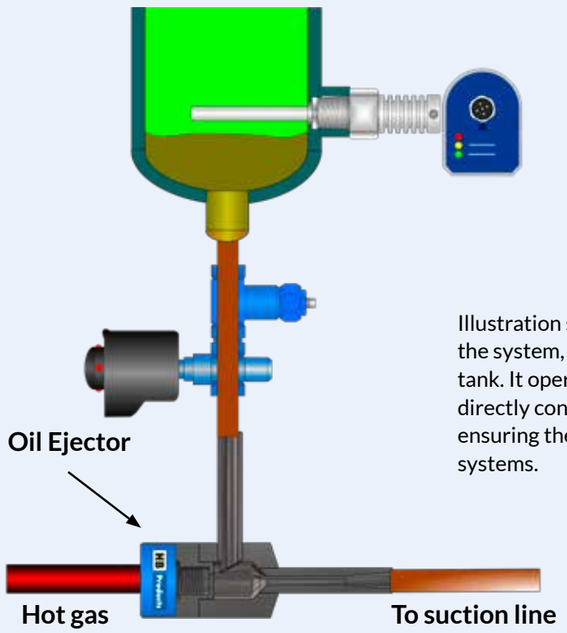

Illustration showcasing our Oil Ejector integrated into the system, effectively removing oil from the ammonia tank. It operates alongside the HBOR/C, which can directly control a valve to fill or empty a container, ensuring the correct oil level in ammonia refrigeration systems.

Scan the QR code and download the data sheet

Oil Return Switch

Standard HBSO switches are suitable for oil return applications in non-ammonia systems where ammonia is not present above the oil. For more information, refer to the oil switches section on pages 13-14.

HBSO

The HBOR is a Level Switch specifically designed for automatic oil return in ammonia refrigeration systems. It detects oil in both liquid ammonia and ammonia gas, allowing for oil drainage without releasing liquid ammonia or ammonia gas.

Recommended refrigerant temperature: 0°C to 80°C (32°F to 122°F)
Ambient temperature: 0°C to 50°C (32°F to 122°F)
Protection degree: IP54 (Available as IP65)
Pressure tolerance: 100 bar (1450 psi)
Power supply: 24V AC/DC
Output: PNP/NPN and NO/NC

HBOR

The HBOC/C sensor is designed to detect oil levels in gas. Similar to the HBSO, it features a built-in controller that maintains desired oil levels by directly controlling valves for filling or emptying a vessel.

Recommended oil temperature: 0°C to 100°C (32°F to 212°F)
Ambient temperature: -30°C to 50°C (32°F to 122°F)
Protection degree: IP54
Pressure tolerance: 100 bar (1450 psi)
Power supply: 24V DC
Output M12: Solid-state relay and NO/NC
Output cable: 24V DC 1A

HBOC/C

The HBOR/C is a specialized version of the HBOR switch, designed for ammonia refrigeration systems with direct solenoid valve control. It features a built-in controller to maintain the desired oil level by directly managing the solenoid valve for filling or emptying a vessel.

Recommended oil temperature: 0°C to 100°C (32°F to 212°F)
Ambient temperature: -30°C to 50°C (32°F to 122°F)
Protection degree: IP54
Pressure tolerance: 100 bar (1450 psi)
Power supply: 24V DC
Output M12: Solid-state relay and NO/NC
Output cable: 24V DC 1A

HBOR/C

Oil Ejector

The HBEJ-MK2 is a straightforward oil ejector for oil return powered by hot gas in refrigeration systems. Commonly used in both ammonia and CO2 systems, the ejector typically moves oil from a low position up into the suction line in systems where the evaporator is placed lower than the compressor.

Liquid/hot gas temperature: -60°C to 150°C (-76°F to 302°F)
Pressure tolerance: 130 bar (1885 psi)

HBEJ

AMMONIA
R717

CO2
BUTANE
ISOBUTANE
PROPANE

HFC
HFO
CFC

OIL

Liquid Level Sensors

Liquid Level Sensors are essential components used in various industries to measure and monitor the level of liquids in tanks, vessels, and other containers. We have a diverse range of capacitive Liquid Level Sensors tailored for refrigeration applications.

Features and benefits

- **Tailored for industrial refrigeration:** Our sensors are built for industrial refrigeration applications, ensuring optimal performance and reliability without needing adaptations or modifications.
- **Easy installation and diagnostics:** Featuring a unique split design, installation and diagnostics a re simplified, saving time and effort during setup and troubleshooting. This also allows seamless updates between different models without replacing the entire unit. For instance, going from HBLT-A1 to HBLT-A3 is as simple as swapping out the electronic head.
- **Wide temperature range:** Our sensors are suitable for temperatures ranging from -60°C to 80°C (-76°F to 176°F) and are ideal for use in diverse environmental conditions, ensuring reliable performance across a range of operating temperatures.
- **Many length options:** Mechanical parts are available in rigid probe versions up to 3.000 mm, while our wire versions cater to longer applications ranging from 250 mm to 6 m in length, offering on-site adjustability.
- **2-wire option:** Our Level Sensors are available as a 2-wire solution upon request.
- **Direct valve control:** The Level Sensors are available with a built-in controller for direct valve operation. The controller manages modulating and stepper motor valves without requiring a separate controller or PLC.
- **Sensors for all types of liquids:** We have sensors for all types of liquids, such as ammonia, oil, CO2 and butane.
- **Easy configuration:** Our products can be accurately configured to suit specific application requirements with options for both plug-and-play installation and customization using the HB Tool.

Refrigerant/liquid	Sensor	Sensor and controller
CO2 R744 **Propane R290** **Butane R600** **Iso butane R600a**	**HBLC-CO2** Power supply: 24V AC/DC 	**HBSLC-CO2/C /S / PWM** Power supply: 24V AC/DC
Ammonia R717 **Water R718**	**HBLT-A3** Power supply: 24V AC/DC 	**HBSLT-A3/C /S /PWM** Power supply: 24V AC/DC
	HBLT-W3-Wire Power supply: 24V AC/DC 	**HBSLT-W3-Wire/C /S /PWM** Power supply: 24V AC/DC
Oil **Fuel**	**HBLC-OIL** Power supply: 24V AC/DC 	**HBSLC-OIL/C /S /PWM** Power supply: 24V AC/DC
HFO, HFC and CFC	**HBLC-HFC** Power supply: 24V AC/DC 	**HBSLC-HFC/C /S /PWM** Power supply: 24V AC/DC
	HBLT-W3-Wire Power supply: 24V AC/DC 	**HBSLT-W3-Wire/C /S /PWM** Power supply: 24V AC/DC

Level Sensors for refrigerants and oil

We offer sensors for both oil, natural and synthetic refrigerants, such as ammonia, CO2, butane, HFO, HFC, and CFC. Our switches are categorized by the different refrigerants, making it easy to select the right one based on your needs.

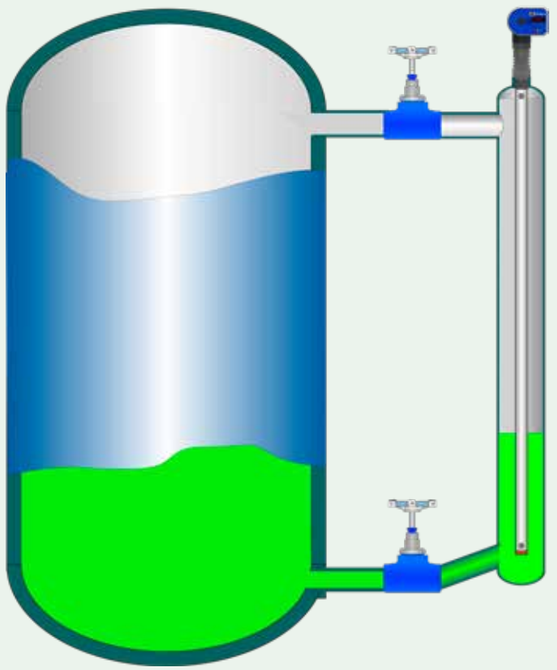

HBLT-A3

Illustration showing our HBLT-A3 Level Sensor installed in a tank. The HBLT-A3 accurately measures the level of ammonia. It can also be installed directly in the tank.

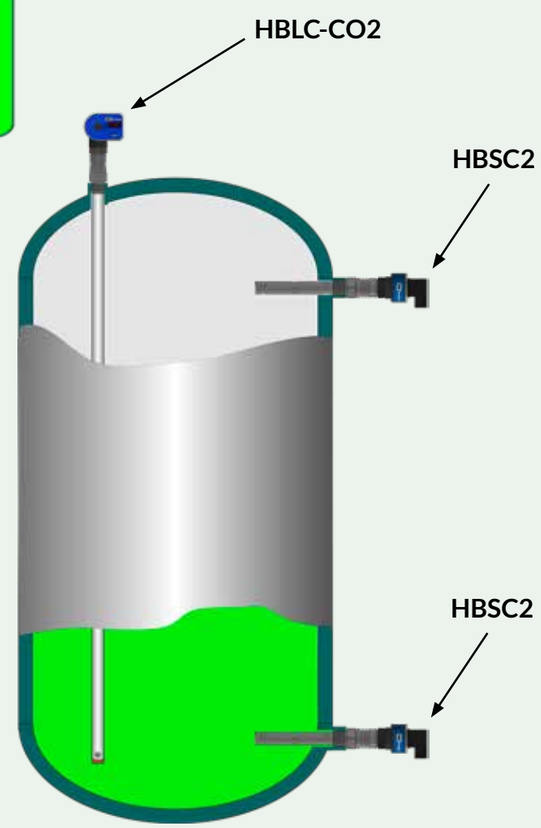

Illustration showing our HBLC-CO2 with two switches in a tank. The HBLC-CO2 measures the CO2 level in the tank, while the switches monitor for excess or insufficient refrigerant levels.

Scan the QR code and download the data sheet

Level Sensors for CO2, Butane, Isobutane and Propane

The HBLC-CO2 sensor is specifically designed for measuring CO2, Butane, or Propane refrigerant levels in chillers, evaporators, and condensers. The sensor provides an analog 4-20 mA output signal for straightforward integration with monitoring systems.

Recommended refrigerant temperature: -55°C to 145°C (-67°F to 293°F)
Ambient temperature: -30°C to 50°C (-22°F to 122°F)
Protection degree: IP65
Pressure tolerance: 150 bar (2175 psi)
Power supply: 24V AC/DC
Output: PNP or NPN (4-20 mA analog and digital alarm)

HBLC-CO2 | **HBSLC-CO2/C /S / PWM**

Level Sensors for Ammonia, Water and Alcohol

The HBLT-A3 capacitive Liquid Level Sensor measures liquid levels in refrigerant vessels, heat pumps, and other industrial applications. This intelligent sensor comes with a built-in microprocessor and has advanced control capabilities for modulating motor valves, stepper valves, or PWM valves.

Recommended refrigerant temperature: -60°C to 110°C (-76°F to 230°F)
Ambient temperature: -30°C to 50°C (-22°F to 122°F)
Protection degree: IP65
Pressure tolerance: 100 bar (1450 psi)
Power supply: 24V AC/DC
Output: PNP or NPN (4-20 mA analog and digital alarm)

HBLT-A3 | **HBSLT-A3/C /S /PWM**

The HBLT-W3-Wire and HBSLT-W3-Wire are innovative capacitive Wire Sensors designed for accurate liquid level measurement in industrial refrigeration systems. Built with a 1,5 mm insulated stainless steel wire, they can withstand high pressure and low temperatures, providing a reliable and durable solution. The sensor wire can be adjusted from 250 mm to 6.000 mm, providing flexibility for various applications.

Recommended refrigerant temperature: -60°C to 60°C (-76°F to 140°F)
Ambient temperature: -30°C to 50°C (-22°F to 122°F)
Protection degree: IP65
Pressure tolerance: 100 bar (1450 psi)
Power supply: 24V AC/DC
Output: PNP or NPN (4-20 mA analog and digital alarm)

HBLT-W3-Wire | **HBSLT-W3-Wire**

Level Sensors for refrigerants and oil

Level Sensors for oil

The HBLC-OIL sensor is designed to measure oil levels and transmits this information via a 4-20 mA analog signal, making it a reliable tool for various industrial applications.

Recommended oil temperature: 0°C to 145°C (32°F to 293°F)
Ambient temperature: -30°C to 50°C (-22°F to 122°F)
Protection degree: IP65
Pressure tolerance: 150 bar (2175 psi)
Power supply: 24V AC/DC
Output: PNP or NPN (4-20 mA analog and digital alarm)

HBLC-OIL | **HBSLC-OIL/C /S /PWM**

Level Sensors for HFO, HFC and CFC

The HBLC-HFC sensor is specifically designed for measuring HFC, HFO, and CFC refrigerant levels in chillers, evaporators, or condensers - and transmits this information via a 4-20 mA analog signal. Although pre-configured for R134, it can be adjusted to detect other types of HFC, HFO, or CFC refrigerants.

Recommended refrigerant temperature: 0°C to 145°C (32°F to 293°F)
Ambient temperature: -30°C to 50°C (-22°F to 122°F)
Protection degree: IP65
Pressure tolerance: 100 bar (1450 psi)
Power supply: 24V AC/DC
Output: PNP or NPN (4-20 mA analog and digital alarm)

HBLC-HFC | **HBSLC-HFC/C /S /PWM**

The HBLT-W3-Wire and HBSLT-W3-Wire are innovative capacitive Wire Sensors designed for accurate liquid level measurement in industrial refrigeration systems. Built with a 1,5 mm insulated stainless steel wire, they can withstand high pressure and low temperatures, providing a reliable and durable solution. The sensor wire can be adjusted from 250 mm to 6.000 mm, providing flexibility for various applications.

Recommended refrigerant temperature: -60°C to 60°C (-76°F to 140°F)
Ambient temperature: -30°C to 50°C (-22°F to 122°F)
Protection degree: IP65
Pressure tolerance: 100 bar (1450 psi)
Power supply: 24V AC/DC
Output: PNP or NPN (4-20 mA analog and digital alarm)

HBLT-W3-Wire | **HBSLT-W3-Wire**

ATEX Level Sensors

The HBLC-EX sensors are specifically designed for measuring different liquids in chillers, evaporators, and condensers.

Recommended liquid temperature: 0°C to 100°C (32°F to 212°F)
Ambient temperature: -20°C to 50°C (-4°F to 122°F)
Protection degree: IP65
Pressure tolerance: 150 bar (2175 psi)
Power supply: 24V DC through a barrier
Output: 4-20 mA through a barrier

HBLC-CO2-EX I HBLC-OIL-EX I HBLC-HFC-EX

The HBLT-A3-EX capacitive Liquid Level Sensor measures liquid levels in refrigerant vessels, heat pumps, and other industrial applications.

Recommended liquid temperature: 0°C to 100°C (32°F to 212°F)
Ambient temperature: -20°C to 50°C (-4°F to 122°F)
Protection degree: IP65
Pressure tolerance: 100 bar (1450 psi)
Power supply: 24V DC through a barrier
Output: 4-20 mA through a barrier

HBLT-A3-EX

The HBLT-W3-Wire-EX is an innovative capacitive Wire Sensors designed for accurate liquid level measurement in industrial refrigeration systems.

Recommended liquid temperature: 0°C to 100°C (32°F to 212°F)
Ambient temperature: -20°C to 50°C (-4°F to 122°F)
Protection degree: IP65
Pressure tolerance: 100 bar (1450 psi)
Power supply: 24V DC through a barrier
Output: 4-20 mA through a barrier

HBLT-W3-Wire-EX

AMMONIA
R717

CO2
BUTANE
ISOBUTANE
PROPANE

HFC
HFO
CFC

Vapor Quality Sensors

The Vapor Quality Sensor measures the liquid content (vol %) at the evaporator's outlet and is used to control the liquid feed to the evaporator. It operates effectively across a wide range of circulation rates, from DX to high CR numbers.

By maintaining the circulation rate during part load, the sensor enables you to increase suction pressure and save energy. In DX systems, it can replace traditional superheat control, offering a faster control loop and reducing superheat to less than 1K.

The Vapor Quality Sensor allows pump-circulated systems to operate with CR numbers below 1.4, leading to energy savings and the ability to design systems with ultra-low refrigerant charges.

Additionally, the sensor can be used for compressor protection by providing an alarm if liquid reaches the compressor, and it also helps optimize overall system performance.

Features and benefits

- **Improved energy efficiency:** In pump-circulated systems, where overfilling the evaporator with liquid reduces heat transfer and increases energy consumption, our sensor optimizes liquid levels, resulting in energy savings of at least 20%. Similarly, in DX systems, it enhances efficiency by reducing superheating and power consumption, leading to energy savings of up to 20% during full load and 50% during part load.
- **Easy installation and diagnostics:** The unique split design makes it easy to change the electronic part without evacuating the system.
- **Direct evaporator control:** The sensors come with an integrated controller for direct evaporator control, allowing modulating and stepper motor expansion valves to be operated without the need for an additional controller or PLC. This setup is ideal for accessible installations, such as on chillers.
- **Pipe sizes:** Available in pipe sizes ranging from 20 mm to 300 mm.
- **Flexible installation options:** Our sensors are designed for easy installation at the evaporator outlet, providing fast response times and minimizing the risk of liquid buildup. They can be installed on both horizontal and vertical pipes, offering versatility in placement.
- **Sensors for all types of liquids:** Suitable for all common liquids.
- **Compressor protection:** Our sensors also serve as a simple yet effective solution for detecting liquid in the suction line, helping to prevent compressor damage caused by liquid slugging. The sensor delivers timely alarms and continuous liquid content measurements, safeguarding your compressor against severe damage.

Products	Installation location	Pipe size (Inch / mm)	Refrigerants
Inline	Straight, horizontal or vertical	25-100 mm	CO2 HFC/HFO Ammonia HC
Strainer Housing	Elbow	20-300 mm	Ammonia HFC/HFO
Rod Style	In an elbow after a horizontal pipe	50-200 mm	CO2 HFC/HFO Ammonia HC

Pipe size

Inch	¼"	½"	1"	2"	4"	8"	12"
mm	6	13	25	50	100	200	300

HBX-DX-IN & HBX-CR-IN - Inline

Vapor Quality Sensor

The Inline Vapor Quality Sensor features a straight design that can be installed either horizontally or vertically. Compatible with all refrigerants, it measures liquid across the entire section and supports flow in both directions. Available in sizes ranging from 25 mm to 100 mm, this sensor's smooth internal design ensures minimal pressure loss, making it a highly efficient choice.

Key features

- **Flexible system compatibility:** Works with both DX systems and overfeed systems.
- **Pipe sizes:** Available in pipe sizes ranging from 25 mm to 100 mm.
- **Refrigerants:** Suitable for all common refrigerants.
- **Split design:** Simplifies installation and diagnostics; electronic parts can be removed with a union connection.
- **Easy configuration:** Configuration with a PC using HB Tool software.

This product is available in a special ATEX/IECEx version.

Scan the QR code and download the data sheet

Data information

Refrigerant temperature: -60°C to 100°C (-76°F to 212°F)
Ambient temperature: -30°C to 50°C (-22°F to 122°F)
Protection degree: IP65
Pressure tolerance: 100 bar (1450 psi)
Power supply: 24V AC/DC
Analog output: 4-20 mA
Digital output: 24V, 1A
Control output: 1A, 24V for modulating or PWM (Available in special versions)
Suitable for hazardous environments: IECEx or ATEX (Available in special versions)

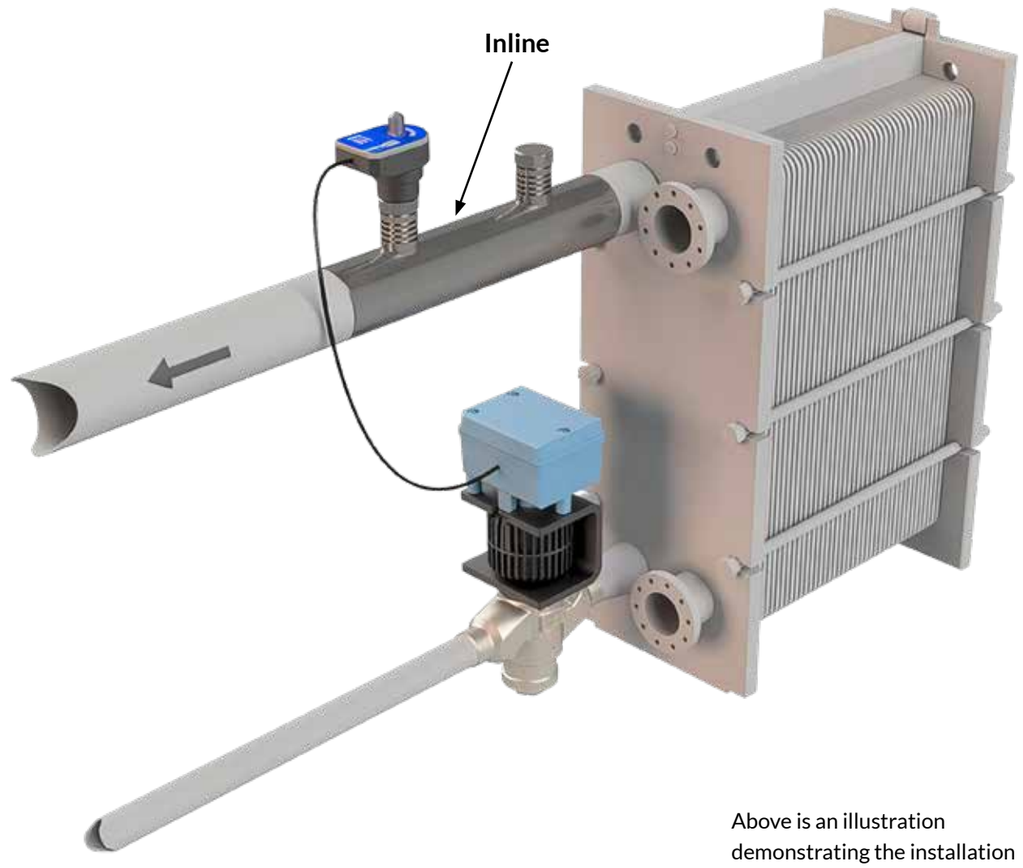

Above is an illustration demonstrating the installation of the Inline sensor in the system. The sensor is positioned in a horizontal position.

HBX-ST-DX & HBX-CR-ST – Strainer Housing

Vapor Quality Sensor

The sensor is seamlessly integrated into a standard strainer housing, making installation straightforward and enhancing overall functionality. Its butt-welded connection allows for easy welding with matching pipe sizes, simplifying the setup. This design not only ensures easy installation but also facilitates maintenance. The strainer's lid is removable, providing convenient access to the sensor conductor for cleaning.

The strainer housing version is designed to fit into a standard housing and should be installed in an elbow where the suction line drops. It is compatible with HFC/HFOs and ammonia but is not suitable for CO2 or hydrocarbons. The sensor measures liquid across the entire section and is available in sizes ranging from 25 mm to 300 mm.

With its smooth internal design, the sensor minimizes pressure loss, making it a highly efficient choice.

Key features

- **LED indicators:** Provides clear visual indicators for power supply and alarm status.
- **Material options:** The sensor integrated into a standard strainer house is available in both carbon steel (DN20 to DN300) and stainless steel (DN20 to DN65).
- **Flexible system compatibility:** Works with both DX systems and overfeed systems.
- **Pipe sizes:** Available in pipe sizes ranging from 20 mm to 300 mm.
- **Refrigerants:** Works with a wide range of refrigerants but is not suited for CO2, propane and butane used in DX applications.
- **Split design:** Simplifies installation and diagnostics; electronic parts can be removed with two screws.
- **Easy configuration:** Configuration with a PC using HB Tool software.

This product is available in a special ATEX/IECEx version.

Scan the QR code and download the data sheet

Data information

Refrigerant temperature: -60°C to 100°C (-76°F to 212°F)
Ambient temperature: -30°C to 50°C (-22°F to 122°F)
Protection degree: IP65
Pressure tolerance: 52 bar (750 psi)
Power supply: 24V AC/DC
Analog output: 4-20 mA
Digital output: 24V, 1A
Control output: 1A, 24V for modulating or PWM (Available in special versions)
Suitable for hazardous environments: IECEx or ATEX (Available in special versions)

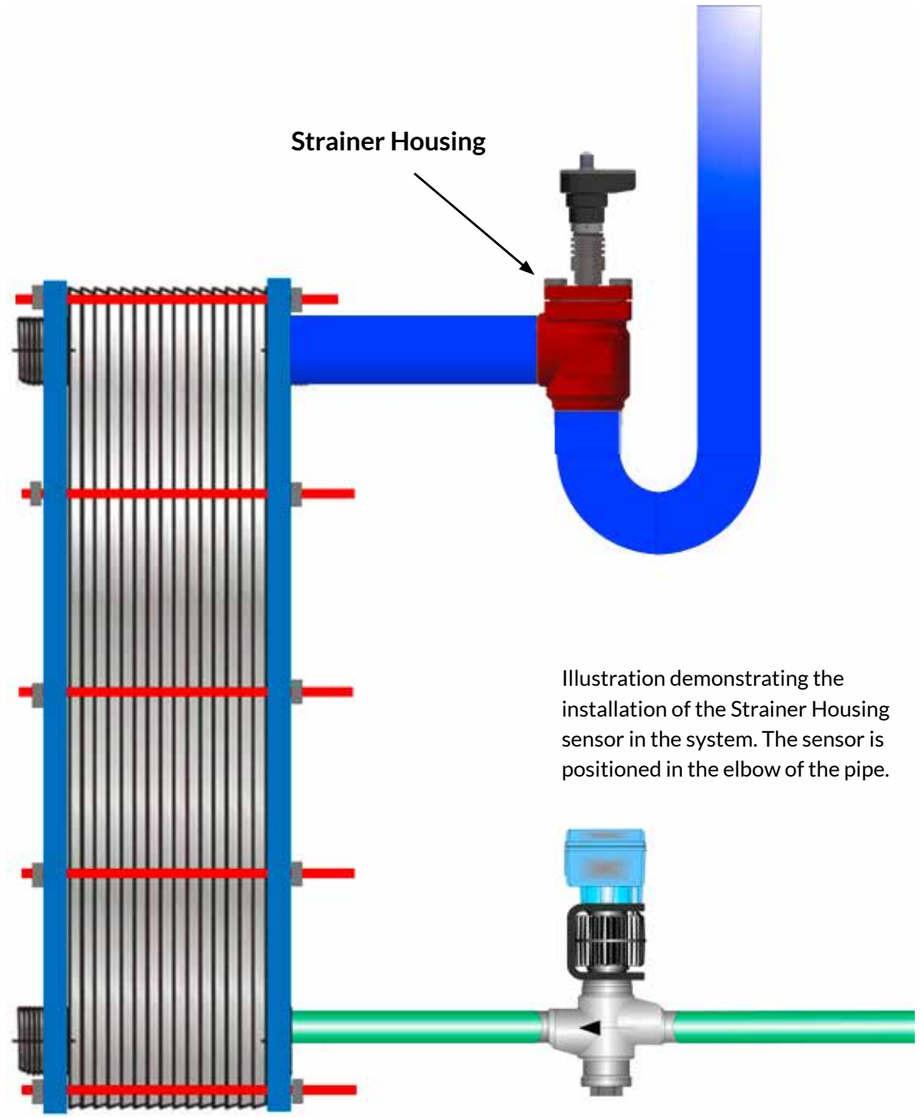

Illustration demonstrating the installation of the Strainer Housing sensor in the system. The sensor is positioned in the elbow of the pipe.

HBX-DX-R & HBX-CR-R – Rod Style

Vapor Quality Sensor

The Rod Style sensor is a versatile Vapor Quality Sensor suitable for pipes ranging from 50 mm to 200 mm and beyond. While it offers broad compatibility with all refrigerants, it requires careful installation as it only measures liquid within the perforated pipe section. To ensure accurate readings, the sensor must be installed in an elbow, positioned at the bottom of a horizontal pipe where liquid collects. Incorrect installation can lead to unreliable outputs.

For suction lines larger than 50 mm (2”), the Rod Style sensor is typically the most cost-effective Vapor Quality Sensor, though it is also the most challenging to install properly. In large, pumped ammonia systems, the sensor can be installed vertically from the bottom up, but this method is effective only for overfed ammonia systems.

Key features

- **LED indicators:** Provides clear visual indicators for power supply and alarm status.
- **Flexible system compatibility:** Works with both DX systems and overfeed systems.
- **Pipe sizes:** Available in pipe sizes ranging from 50 mm to 200 mm.
- **Refrigerants:** Suitable for all common refrigerants.
- **Split design:** Simplifies installation and diagnostics; electronic parts can be removed with two screws.
- **Easy configuration:** Configuration with a PC using HB Tool software.

This product is available in a special ATEX/IECEx version.

Scan the QR code and download the data sheet

Data information

Refrigerant temperature: -60°C to 100°C (-76°F to 212°F)
Ambient temperature: -30°C to 50°C (-22°F to 122°F)
Protection degree: IP65
Pressure tolerance: 100 bar (1450 psi)
Power supply: 24V AC/DC
Analog output: 4-20 mA
Digital output: 24V, 1A
Control output: 1A, 24V for modulating or PWM (Available in special versions)
Suitable for hazardous environments: IECEx or ATEX (Available in special versions)

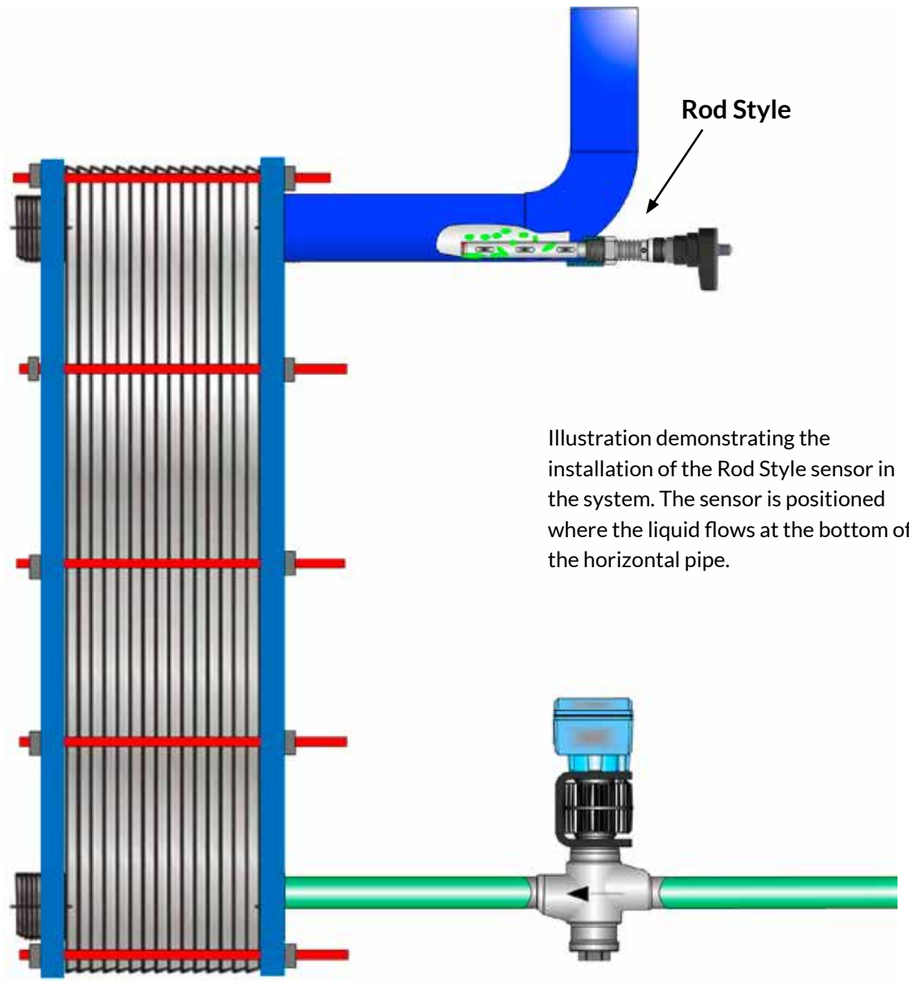

Illustration demonstrating the installation of the Rod Style sensor in the system. The sensor is positioned where the liquid flows at the bottom of the horizontal pipe.

Defrost Sensors

Ice buildup on the evaporator can significantly reduce system performance and cooling capacity. Traditionally, defrosts have been based on fixed schedules, leading to unnecessary defrosts during periods of low humidity. Our Defrost Sensor, provides a flexible solution for automatic defrosting, initiating the process only when necessary.

Features and benefits

- **Efficient defrosting:** By accurately detecting ice buildup on cooling pipes, the sensor ensures that defrosting is initiated only when necessary, optimizing energy usage and preventing unnecessary defrost cycles.
- **Capacitive measuring principle:** Based on the capacitive measuring principle, this sensor accurately measures ice thickness between fins, providing a 4-20 mA analog or advanced digital output for direct defrosting control. The digital output includes a temperature sensor for defrosting completion detection, ensuring efficient and effective defrosting operations.
- **Easy installation:** The sensor can be installed on both new and old evaporators without system shutdown. It consists of a control box, a coated steel wire, and a temperature sensor for some versions, making installation straightforward.
- **Choose the correct control mode for your convenience:** Simple analog: Control from a PLC with parameters inside, preferred for easy access. Smart analog: Direct control from the sensor box via a PC connection, offering flexibility in system control.
- **Customizable options:** Available in three versions with wire lengths ranging from 10 meters to 30 meters, our sensors offer flexibility to suit various application requirements.
- **Easy configuration:** The Defrost Sensor can be accurately configured to suit your specific application with our HB Tool.

Function: Defrost Sensor for cold room applications
Temperature range: -30°C to 10°C (-22°F to 50°F)
Power supply: 24V AC/DC
Output: 4-20 mA

Function: Defrost Sensor for heat pumps and other outdoor applications
Temperature range: -60°C to 20°C (-76°F to 68°F)
Power supply: 24V AC/DC
Output: 4-20 mA

Function: Defrost Sensor for freezer applications
Temperature range: -30°C to 0°C (-22°F to 32°F)
Power supply: 24V AC/DC
Output: 4-20 mA

Function: Defrost Sensor for low temperature freezer applications
Temperature range: -60°C to 0°C (-76°F to 32°F)
Power supply: 24V AC/DC
Output: 4-20 mA

Function: Ice Bank Sensor
Power supply: 24V AC/DC
Output: 4-20 mA

Defrost Sensors

We have a solid range of Defrost Sensors for different temperature ranges depending on your needs.

Below is an illustration on how the sensors are installed.

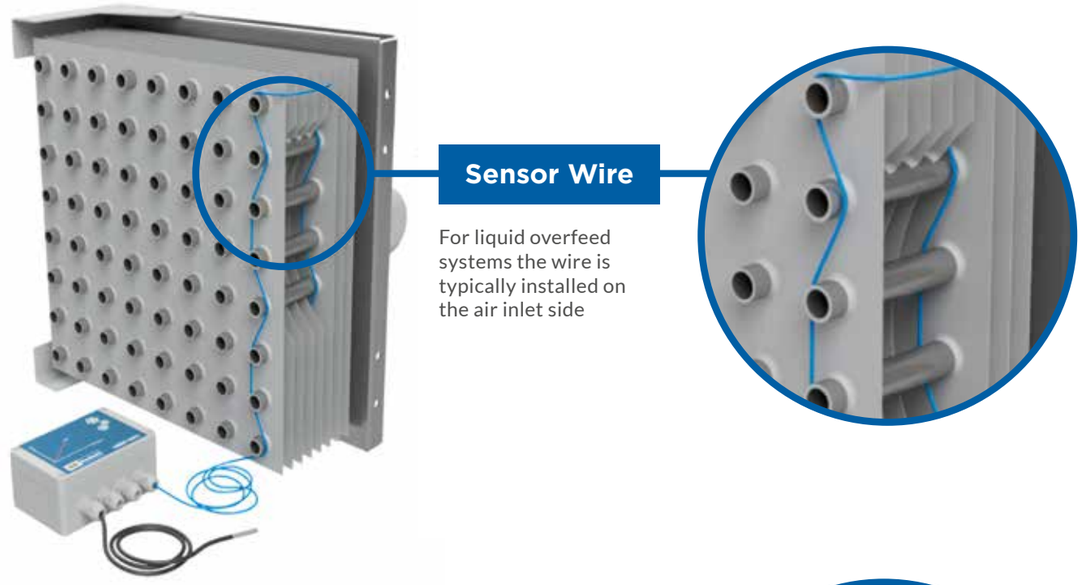

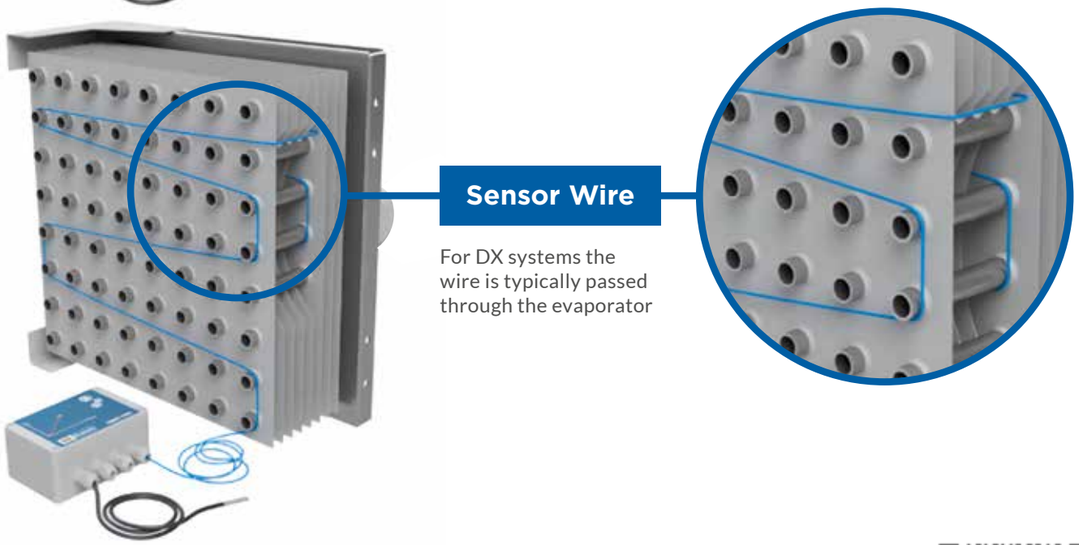

Scan the QR code and download the data sheet

The HBDF is a sensor designed for evaporators with at least 5 mm fin spacing, operating in cold rooms with temperatures ranging from -30°C to 10°C (-22°F to 50°F). It is intended for indoor use and is not suitable for wet or outdoor environments. The sensor integrates a temperature sensor for compensation within the range of 0°C to 10°C (32°F to 50°F).

Smart defrosting: Stops defrost when the ice is melted, thanks to input from a temperature sensor located on the evaporator surface.

Simple installation: The sensor can be easily installed, even in existing sites.

Energy efficiency: More efficient than timer-based defrosting, saving energy and costs.

HBDF-MK2

The HBDF-OD is a sensor designed for outdoor evaporators, with temperature guidance capabilities in the range of -60°C to 20°C (-76°F to 68°F). However, it may be affected by rain, snow, or other forms of moisture on the evaporator surface. Given these environmental influences, the sensor serves best as an assistant or guide for a controller rather than as a sole defrosting solution.

Moisture protection: Features a built-in heater and a potted electronic unit to resist humidity.

Smart defrosting: Stops defrost when the ice is melted, thanks to input from a temperature sensor located on the evaporator surface.

Simple installation: The sensor can be easily installed, even in existing sites.

Energy efficiency: More efficient than timer-based defrosting, saving energy and costs.

HBDF-OD

The HBDF-freezer is a sensor designed for evaporators with a minimum fin spacing of 5 mm, operating in cold rooms with temperatures ranging from -30°C to 0°C (-22°F to 32°F). It is intended exclusively for dry indoor environments.

Smart defrosting: Stops defrost when the ice is melted, thanks to input from a temperature sensor located on the evaporator surface.

Simple installation: The sensor can be easily installed, even in existing sites.

Energy efficiency: More efficient than timer-based defrosting, saving energy and costs.

HBDF-freezer

The HBDF-LT sensor is engineered for evaporators with a minimum fin spacing of 5 mm in cold rooms, capable of operating in temperatures as low as -60°C (-76°F).

Low temperature protection: Equipped with a built-in heater and a potted electronic unit, this sensor is designed to function in extremely cold environments, with temperatures as low as -60°C (-76°F).

Smart defrosting: Stops defrost when the ice is melted, thanks to input from a temperature sensor located on the evaporator surface.

Simple installation: The sensor can be easily installed, even in existing sites.

Energy efficiency: More efficient than timer-based defrosting, saving energy and costs.

HBDF-LT

Ice Bank Sensor

The HBIB-MK2-5 sensor measures the thickness of the ice layer on a cooling pipe in a grounded metal water tank, making it ideal for large ice banks. The sensor includes an electronic unit from a Level Sensor and a measuring wire. The wire is installed at a gradually increasing distance from the cooling pipe and detects the portion of the measuring wire covered by ice.

Thickness range: Measures up to 50 mm of ice thickness in the standard version, with options for thicker ice layers upon request.

Simple installation: The sensor can be easily installed, even in existing sites.

HBIB-MK2-5

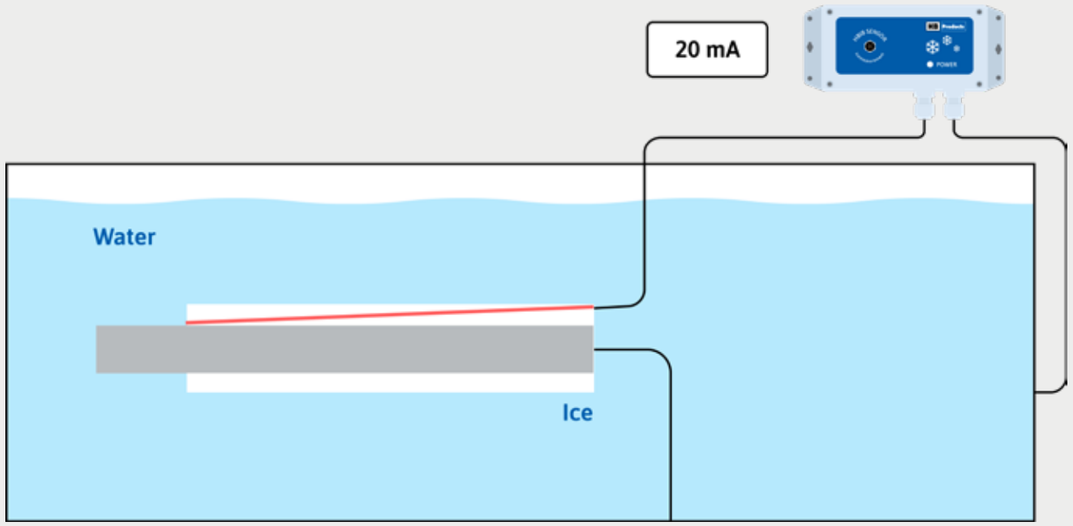

Scan the QR code and download the data sheet

Two Ice Bank Sensors have been installed on the top cooling pipes of an ice bank at a dairy in Sweden. This system is part of an older installation.

Safety & Leakage Detection

We offer a variety of sensors specifically designed for detecting leaks. Early leak detection is crucial for safeguarding people, the environment, and valuable assets. Our sensors are versatile and can be used in cold storage, machine rooms, and other critical areas, providing reliable protection across different applications.

- Gas alarms are designed to detect small refrigerant leaks in areas like cold storage facilities and machine rooms, providing early warnings before any damage occurs. These alarms are available for both CO2 and ammonia.
- pH sensors detect ammonia in water and glycol brines, sensitive enough to identify levels above 50 ppm. However, in high-pH antifreeze and seawater, larger leaks may be necessary for detection due to their properties.
- Compressor protection sensors monitor the suction line in front of the compressor, providing an alert when liquids are detected. They continuously measure liquid content, helping to prevent liquid slugging, which can severely damage compressors.
- Cascade systems that use CO2 and ammonia face challenges with CO2 leakage into ammonia, leading to the formation of ammonia carbamate, a salt that can block pipes and cause system failure. These sensors are designed to help detect and address such issues, ensuring the safety and longevity of refrigeration systems.

Compressor protection - HBCP-IN, HBCP & HBCP-ST

Safety & Leakage Detection
The HBCP-IN, HBCP and HBCP-ST are simplified variants of the Vapor Quality Sensors, specifically designed for installation at the compressor inlet. These sensors are built to trigger an alarm when the liquid content in the gas surpasses a critical set point, providing essential protection for the compressor. The alarm, along with the measured value, is typically transmitted to a PLC for system control, enabling the system to shut down the compressor and prevent liquid slugging.

Both HBCP-IN, HBCP and HBCP-ST sensors are particularly useful in larger systems with multiple evaporators, where managing each unit can be challenging. By preventing liquid refrigerant from entering the compressor, these sensors are vital for system surveillance and troubleshooting, helping to avoid costly breakdowns and ensuring optimal operation.

The sensor is available in 3 versions:

- The Inline Sensor is installed either horizontally or vertically (See the illustration on page 27).
- The Strainer Housing Sensor is installed in an empty strainer house, and it measures all the liquid flowing on the walls (See the illustration on page 29).
- Rod Style Sensor which must be installed in an elbow after at the end of a horizontal pipe. The sensor must be located at the bottom of the pipe where the liquid flows. The sensor will not work if located at the middle of the pipe or in a vertical pipe (See the illustration on page 31).

pH sensor - HBPH-MK2-LT

Safety & Leakage Detection

In refrigeration systems, this sensor is installed in the water circuit after the ammonia evaporator, where it detects small ammonia leaks that alter the pH value.

Designed with differential measurement technology, the sensor ensures a minimum lifespan of 2 years for the sensor element. It is robust and well-suited for industrial applications, requiring less frequent calibration compared to most pH sensors.

The sensor operates as a 2-wire device with a 4-20 mA output corresponding to a pH range of 0 to 14. It functions within an operating range of -15°C to 95°C (5°F to 203°F).

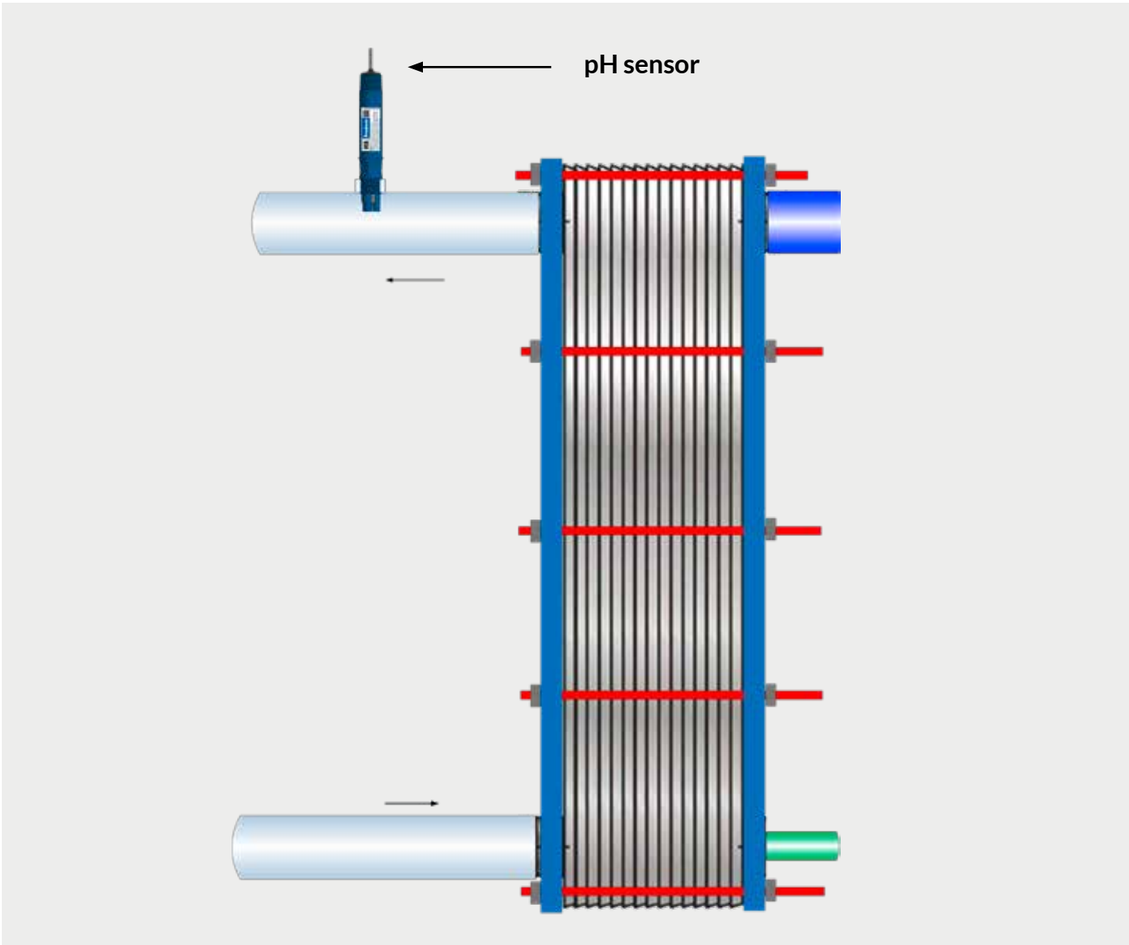

Leakage detection in cascade systems - HBAC

Safety & Leakage Detection

In CO2/Ammonia cascade systems, a CO2 leak into the ammonia can create ammonium carbamate, a corrosive salt that can block the system. Removing this blockage requires drying out the system with hot air, a time-consuming process. Therefore, it's crucial to detect leaks as early as possible to minimize downtime.

When installed in the oil collector or oil drainage unit at the lowest point in shell and plate or shell and tube vessels, this sensor can be used for both leakage detection and oil return. This dual function relies on the analog output, which must be programmed into a PLC or similar system.

The sensor provides a 24V digital alarm and an analog output of 4-20 mA.

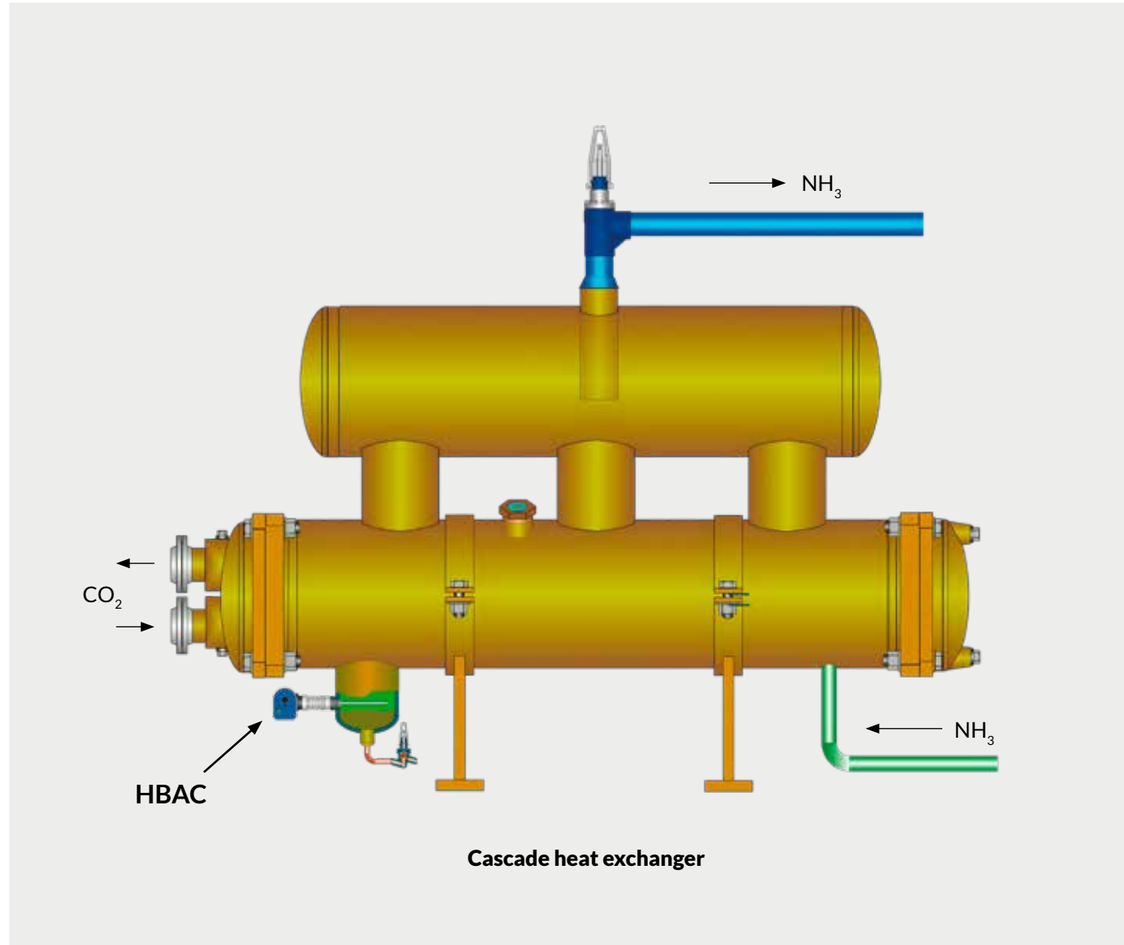

Cascade heat exchanger

Gas alarms - HBGS-CO2, HBGS-NH3 & STG

Safety & Leakage Detection

Gas alarms are designed to detect leaking refrigerants, with sensors available for both CO2 and ammonia, all using the same electronic unit. The sensors feature a 4-20 mA analog output and three configurable alarms.

For CO2 systems, the detector has a range of 0-10.000 ppm, typically used in machine rooms. For ammonia, there are four versions available:

- 0-100 ppm and 0-300 ppm for cold rooms and other sensitive areas.
- 0-1.000 ppm and 0-5.000 ppm for machine rooms.

However, despite our gas alarms being highly reliable, regular inspections are still necessary. The frequency of mandatory testing and replacements will vary between locations, so it is important to be aware of your country's specific regulations.

The STG sensor is designed to detect any leakage or the opening of safety valves in industrial refrigeration systems, compatible with all types of refrigerant gases.

When refrigerant gas levels exceed the user-defined threshold for warnings or alarms, the sensor will trigger an alert to the controller and activate a local visual signal. Additionally, using the MODBUS protocol, values such as % Gas Presence, % Alert Gas Presence, and % Alarm Gas Presence can be monitored, and the corresponding thresholds can be configured.

- STG-B-LEAKDETECTOR: Features a relay with 2 contacts (C-NO), Modbus RS-485 protocol, and operates on a 24V DC power supply.
- STG-F-LEAKDETECTOR: Offers a relay with 2 contacts (C-NO), Modbus RS-485 protocol, two analog outputs (0-10V and 4-20 mA), and is powered by 24V DC.

Alarms and other accessories

Safety & Leakage Detection

We offer a solid range of accessories for leakage detection, including sirens with flash lights compatible with our gas alarms, displays and controllers for brine leakage, and our HB isolator. These tools provide enhanced safety and monitoring capabilities for your systems.

Siren with flash light

Our siren and flash light unit is designed for direct connection to HBGS gas alarm sensors. Suitable for wall or bracket mounting, this robust unit is IP66 rated for outdoor installation, ensuring durability in harsh environments.
The siren can be configured with 64 different tones, with a maximum output of 105dB(A) and a peak value of up to 113dB(A). The alarm features three distinct alarm stages for varying levels of alert. Additionally, the unit includes a high-power LED flash for a clear visual signal, making it an essential component for effective gas detection and alert systems.

Controller - Brine Leakage

The HBPH-C1 display is designed for seamless integration with the HBPH-MK2-LT sensor, providing accurate pH level readings and alarm indications for high levels. Users can easily calibrate and set alarm limits from the front of the display.
The display comes in two versions: one for panel front installation and another built into a cabinet. The cabinet version features a 110/240 V AC supply, suitable for both indoor and outdoor installations.

Pressure & Temperature Sensors

Our Pressure and Temperature Sensors are designed to meet the demands of industrial and commercial applications. Whether you need precise pressure monitoring or accurate temperature measurement, our sensors offer exceptional performance and reliability. Built with robust materials and advanced technology, these sensors ensure optimal operation in even the harshest environments.

The sensor boasts a quick reaction time of less than 2 milliseconds and is available in three pressure ranges: 0 to 6 bar, -1 to 25 bar, and -1 to 200 bar. With its minimal and compact design, the HBPS sensor offers a simple wire connection using 2-wire technology and provides a 4-20 mA output. Designed to withstand a maximum pressure of 200 bar (2900 psi), it operates within a temperature range of -40°C to 125°C (-40°F to 257°F). The sensor also includes an M12 plug connection in accordance with DIN 0627.

HBPS

The HBTS temperature sensor complies with DIN 60751 and is available in two variants: PT100 and PT1000 – DIN B – class 3. The sensor is offered with sensor element lengths of 60 mm and 90 mm, and a sensor diameter of 6 mm. It comes with an included sensor well. It can withstand a maximum pressure of 150 bar (2175 psi) and operates within a temperature range of -50°C to 130°C (-58°F to 266°F). The sensor features an M12 plug connection in accordance with DIN 0627.

HBTS

The HBTS-TR is a DIN 60751 conforming temperature sensor with a 4-20 mA transmitter signal, adjustable via HB Tool software. Configuration is possible using the HBxC-USB programming cable and HBxC-Adapt-DIN/M12 adaptor. It comes with 60 and 90 mm sensor element lengths and a 6 mm diameter. The package includes a sensor well and DIN 43650 plug. Ideal for industrial applications, it can withstand pressures up to 150 bar (2175 psi) and allows for sensor replacement without system evacuation.

HBTS-TR

These sensors are equipped with PT1000 for high accuracy measurement. The HB Tool software allows for easy configuration of the temperature range for the 4-20 mA signal operation. Available in two types, these sensors can be wall-mounted with direct measurement or with a cable for hot spot measurement. They can be secured on a wall with four screws or directly on a selected spot. Designed for simplicity and efficiency, these sensors emit a 4-20 mA signal to a PLC.

HBTS-TR-W

The Cable Temperature Sensors are designed as signal sensors for electronic thermostats, regulators, and thermometers. These sensors can be used virtually anywhere temperature measurement or monitoring is needed, either mounted in a sensor well or directly. Available in two types, they come as 4-wire (4 X 0.24mm²) (PT 100) or 2-wire (2 X 0.5 mm²) (PT1000). They operate within a temperature range of -40°C to 130°C (-40°F to 266°F), with a peak of 150°C (302°F).

HBTS/Cable

Optimal safety in hazardous areas

Why use ATEX and IECEx approved sensors?

In various industries, working conditions and manufacturing processes can lead to the presence of flammable gases, vapors, and dust, posing significant risks to personnel and equipment. Modern automation further increases the necessity for sensors in hazardous areas where these elements can present fire or explosion hazards.
International regulations, such as ATEX (Directive 2014/34/EU) and IECEx, have established Conformity Assessment Schemes to ensure that equipment used in these areas meets the highest international standards for safety and reliability.

ATEX zones

HB Products offers Level Switches, Level Sensors, and Vapor Quality Sensors with ATEX approval for zone 1 as standard and for zone 0 upon request.

ZONE 0

An area where an explosive gas atmosphere is present continuously or for long periods.

ZONE 1

An area where an explosive gas atmosphere is likely to occur during normal operation.

ZONE 2

An area where an explosive gas atmosphere is not likely to occur during normal operation, and if it does, will only exist for a short time.

Discover Our Products in Action

We offer a wide selection of videos showing our various products, including detailed animations demonstrating how our products work. You can explore these informative videos on our YouTube channel.

Scan the QR code to access our YouTube Channel and discover more about our innovative solutions.

HB Tool

With this specially developed software you can set up and calibrate sensors from HB Products. The Tool can be installed on a PC running MS Windows. Both sensors with a M12 - 5 pin connector and a DIN 43650/ISO 4400 - 4 pin can be connected using an USB cable.

The HB Tool can detect the connected sensor and show all the parameters you can set for it. The data can be stored on the sensor like you store data on a USB stick. The HB Tool can also be used for calibration and troubleshooting in the system.

Proven by the Industry

HB Products has made reliable and efficient sensors and switches for the cooling industry for over 25 years.

We know that refrigeration systems must remain up and running, and we make all our products with that requirement in mind. Therefore, we test new products in refrigeration systems or industrial applications before we add them to our product line. That way we can guarantee that your installation will run safely and efficiently.

All our products are developed and made in Denmark to ensure the highest standards of quality. We use local components widely in the production and have our own in-house QA to ensure that every item lives up to the highest standards.

This product catalog is produced in 2025 and might be subject to adjustments.
For latest and updated info, always check www.hbproducts.dk

HB2025-V2

HB Products A/S
Bøgekildevej 21
DK-8361 Hasselager

Phone +45 87476200

www.hbproducts.dk

We are dedicated to supply swicthes and sensors for industrial applications. Our focus is on refrigeration, but the sensors can as well be used in other industrial applications where robust and reliable sensors are needed.
The sensors are developed and manufactured in Denmark. The parts we use in our production is mainly sourced locally to increase flexibility and reduce long lead times. All the sensors and switches comply with the EU directive and carries the CE marking.